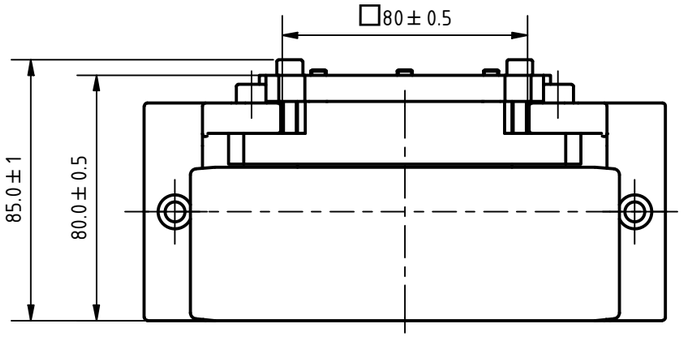

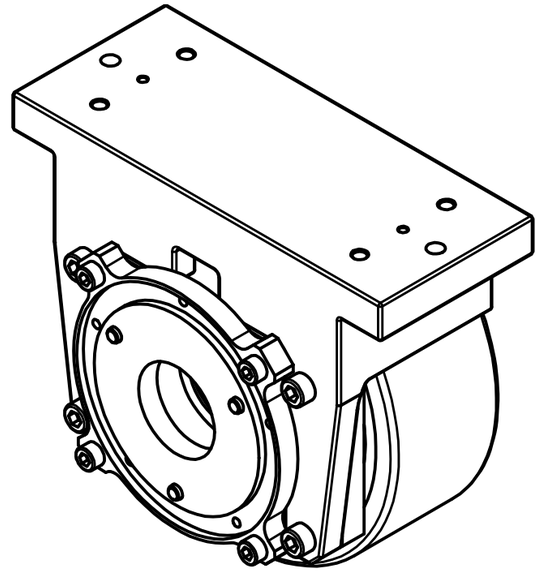

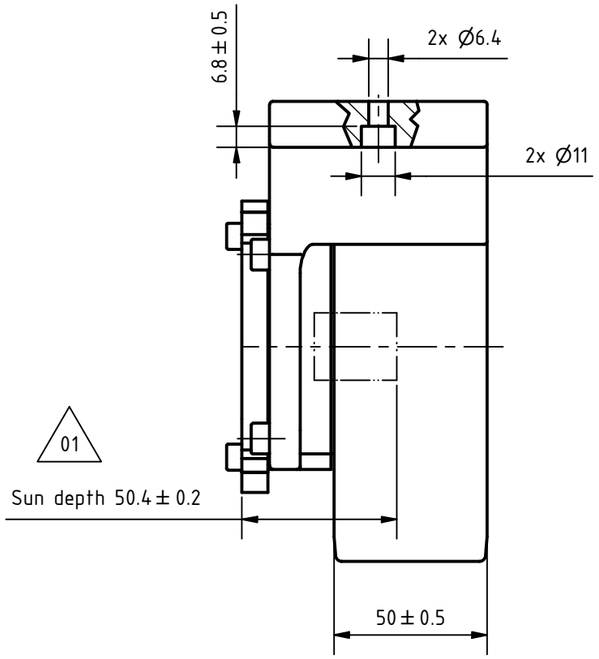

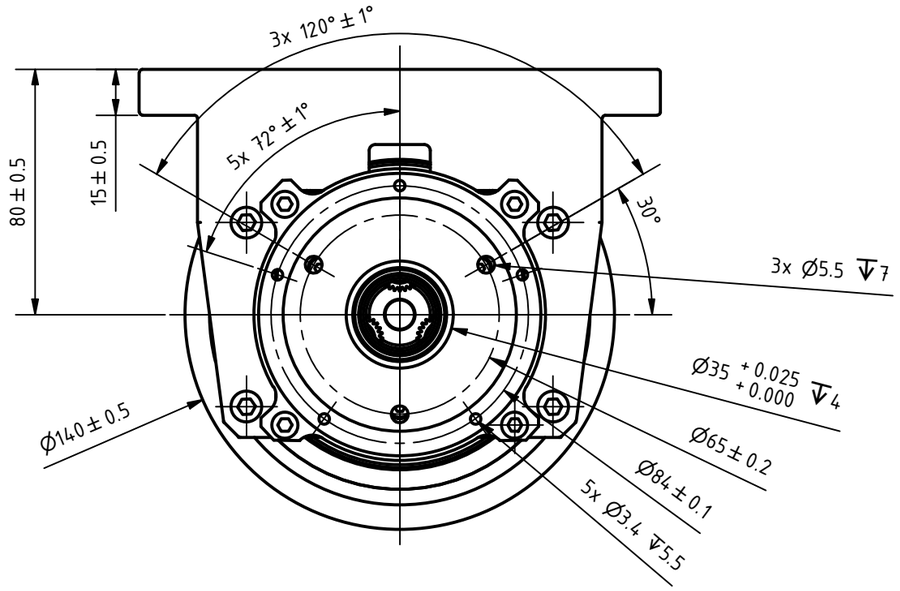

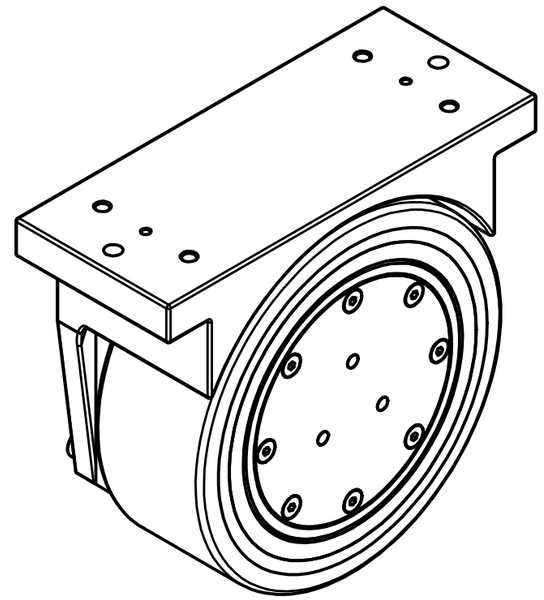

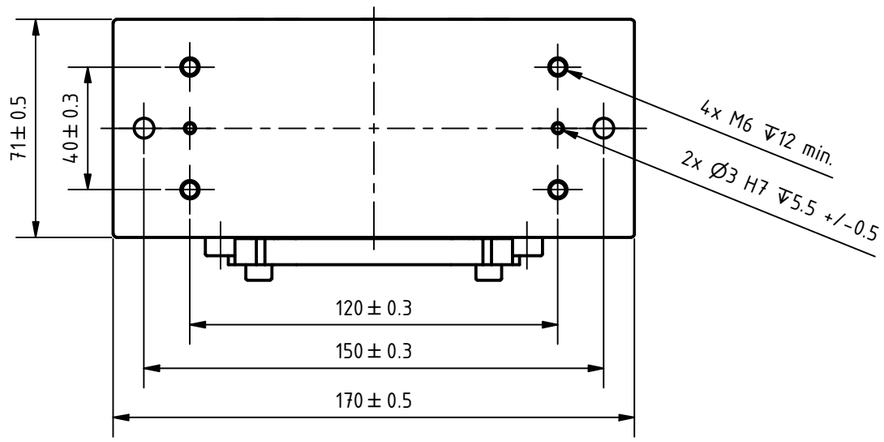

02

WHEEL DRIVE SPECIFICATION					
Reduction Ratio xx		11 (18225/1681)	16 (3969/256)	20 (7371/368)	26 (6993/272)
No. of Stages		2			
Rated Output Torque	Nm	20.27	22.01	23.03	23.13
Max. Output Torque	Nm	40.54	44.02	46.06	46.26
Rated Input Speed	rpm	3500	3500	3500	3500
Max. Input Speed	rpm	4685	5968	8304	8988
Backlash	°	<30 arcmin	<30 arcmin	<30 arcmin	<30 arcmin
Efficiency	%	94	94	94	94
Inertia	10^{-6} kg m²	58	31	19	12
Load Capacity	kg	400			
Wheel Material		Vulkollan			
Ambient Temperature	°C	-15...+90			
Protection Class		IP54			

-0.2 0.2

ISO 8015	ISO 1302	ISO 2768 cK	ISO 13715				Weight: ± 10% 4.6kg
					Date	Name	WD14050-56xx-95C
				Drawn	21.06.2021	Rehse_P	
				Reviewed	22.10.2021	Rehse_P	
02	updated specifications	Kolev_I	26.04.2024	Released	22.10.2021	Rehse_P	20002259 — Scale: 1 : 2
01	sun depth changed	Kolev_I	12.02.2024	Nanotec PLUG & DRIVE			A3 Page 1
REV	Rev. Text	Name	Date	State: Released	Rev: 02	CONFIDENTIAL	