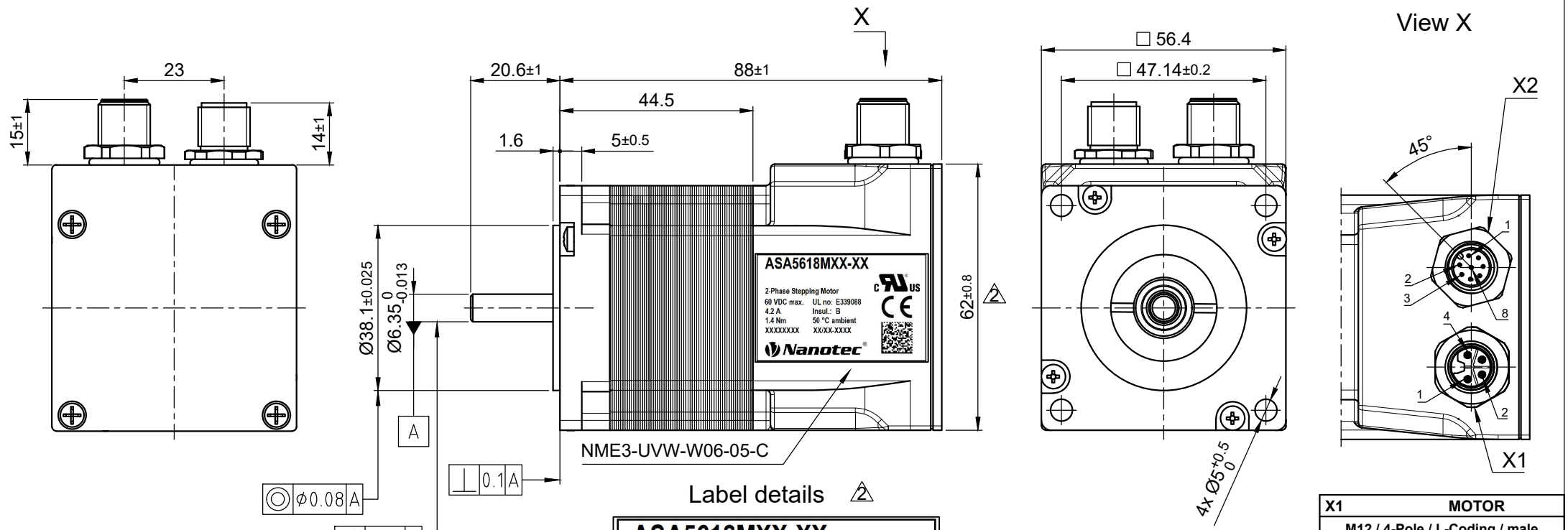

Label details 2

Lot No. 1 4

X1	MOTOR
M12 / 4-Pole / L-Coding / male	
Pin No.	Function
1	A\
2	A
3	B
4	B\
cable shield on housing	

2

1

X2	ENCODER
M12 / 8-Pole / A-Coding / male	
Pin No.	Function
1	A
2	A\
3	B
4	B\
5	GND
6	I\
7	I
8	+UB
cable shield on housing	

MOTOR SPECIFICATION			
Nominal Operating Voltage		V DC	48
Max. Operating Voltage		V DC	60
Current per Winding		A	4.2
Resistance per Phase (25°C)	±15%	Ω	0.45
Inductance per Phase (1 kHz)	±20%	mH	1.6
Holding Torque		Nm	1.4
Step Angle	±5%	°	1.8
Rotor Inertia		kg m²	30 x10^{-6}

2 1 3

ENCODER SPECIFICATION			
Operating Voltage	±10%	V DC	5
Resolution		cpr	4096
Resolution (cpr with quadrature)		ppr	16384
No. of Channels			3
Interface	UVW		
Signal Type	incremental		
Index / Line Driver	yes / yes		

2

A-Shaft	Preload Spring	B-Shaft

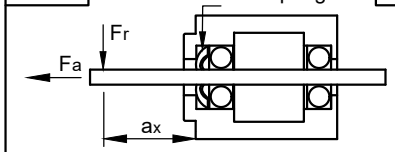

Max. Axial Force	Fa	N	10
Max. Radial Force	Fr (a1 = 10 mm)	N	28
Axial Play	Fa = 4.0 N	mm	0.08
Radial Play	Fr = 4.0 N	mm	0.02

GENERAL MOTOR SPECIFICATION		
Ambient Temperature	°C	-10 ...50
Max. Ambient Humidity (non condensing)	%	85
Protection Class (except shaft outlet)		IP65
Protection Class (shaft outlet)		IP54
Housing color		black

ISO 8015	ISO 1302	ISO 2768 cK	ISO 13715	Weight ±10% 0.9 kg

REV	Rev. Text	Name	Date		Date	Name
04	encoder data	Kolev._I	20.11.2024	Drawn	24.10.2023	Schneid_A
03	housing color	Kolev._I	21.08.2024	Reviewed	09.11.2023	Sejdini._B
02	revise drawing	Kolev._I	16.02.2024	Released	09.11.2023	Sejdini._admin
01	revise drawing	Schneid_A	15.11.2023			

Nanotec PLUG & DRIVE

ASA5618M42-E3

20002131

A4 Page 1

State: Released | Rev: 04 | CONFIDENTIAL