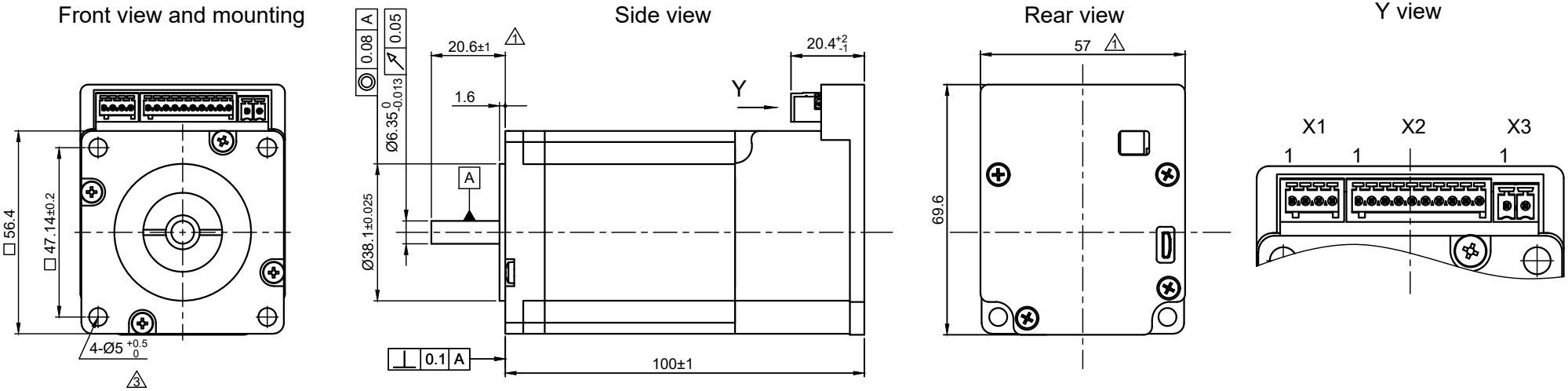

SPECIFICATION \ CONNECTION	BIPOLAR 1
VOLTAGE (VDC)	12 TO 48
AMPS/PHASE(A)	4.2
HOLDING TORQUE (Nm) [lb-in]	1.87 [16.55] 2
DETENT TORQUE (Nm) [lb-in]	0.068 [0.602]
STEP ANGLE (°)±ACCURACY	1.8±5% TO MICROSTEP
WEIGHT (Kg) [lb]	1.1[2.43]

OVERTEMPERATURE PROTECTION (ELECTRONICS): 75°C 1

AMBIENT TEMPERATURE -10°~ 50°C [14°F ~ 122°F] (HIGHER TEMPERATURE REDUCES DUTY CYCLE)

INSULATION RESISTANCE 100 MOhm (UNDER NORMAL TEMPERATURE AND HUMIDITY)

INSULATION CLASS B 130° [266°F]

DIELECTRIC STRENGTH 500VAC FOR 1 MIN. (BETWEEN THE MOTOR COILS AND THE MOTOR CASE)

AMBIENT HUMIDITY MAX. 85% (NO CONDENSATION)

PERMISSIBLE RADIAL+AXIAL FORCE

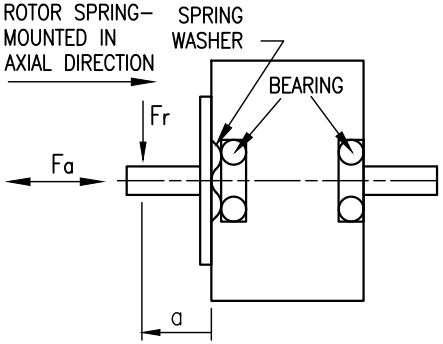

AXIAL-FORCE Fa (N)	Fa=15	
DISTANCE a (mm)	20	
RADIAL-FORCE Fr (N)	52	
	AXIAL	RADIAL
SHAFT PLAY (mm)	0.2Max	0.02
AT LOAD MAX: (N)	200	4.5

X1, Degson 4
15EDGVC-2.5-04P-14 or equivalent Phoenix MCV-04 or equivalent alternative

PIN No.	Function
1	GND
2	Analog Input(0-10V)
3	Output (open drain)
4	+12V (Voltage Output, max.100mA)

X2, Degson 4
15EDGVC-2.5-10P-14 or equivalent Phoenix MCV-10 or equivalent alternative

PIN No.	Function
1	Input1 (+24V)
2	Input2 (+24V)
3	Input3 (+24V)
4	-Enable +5/+24V
5	Enable +5/+24V
6	-Direction +5/+24V
7	Direction +5/+24V
8	-Clock +5/+24V
9	Clock +5/+24V
10	GND

X3, Degson 4
15EDGVC-3.5-02P-14 or equivalent Phoenix FMC-02 or equivalent alternative

PIN No.	Function
1	+VCC(12-48V)
2	GND

1

REV	DESCRIPTION	DATE	DRN
4	change connector description	08.08.25	YBY
3	HOLE Ø5 ADD TOLERANCE +0.5 0	11.07.22	YBY
2	NEW HOLDING TORQUE	11.10.16	GYQ

Nanotec® PLUG & DRIVE

Surface specification DIN ISO 1302 | General tolerances DIN ISO 2768-cH | Work piece edge DIN ISO 13715

	SIGNATURE	DATE
APVD	G.M.	16.05.14
CHKD		
DRN	GYQ	16.05.14

PLUG&DRIVE MOTOR

DWG.NO PD4-C5918L4204-E-01