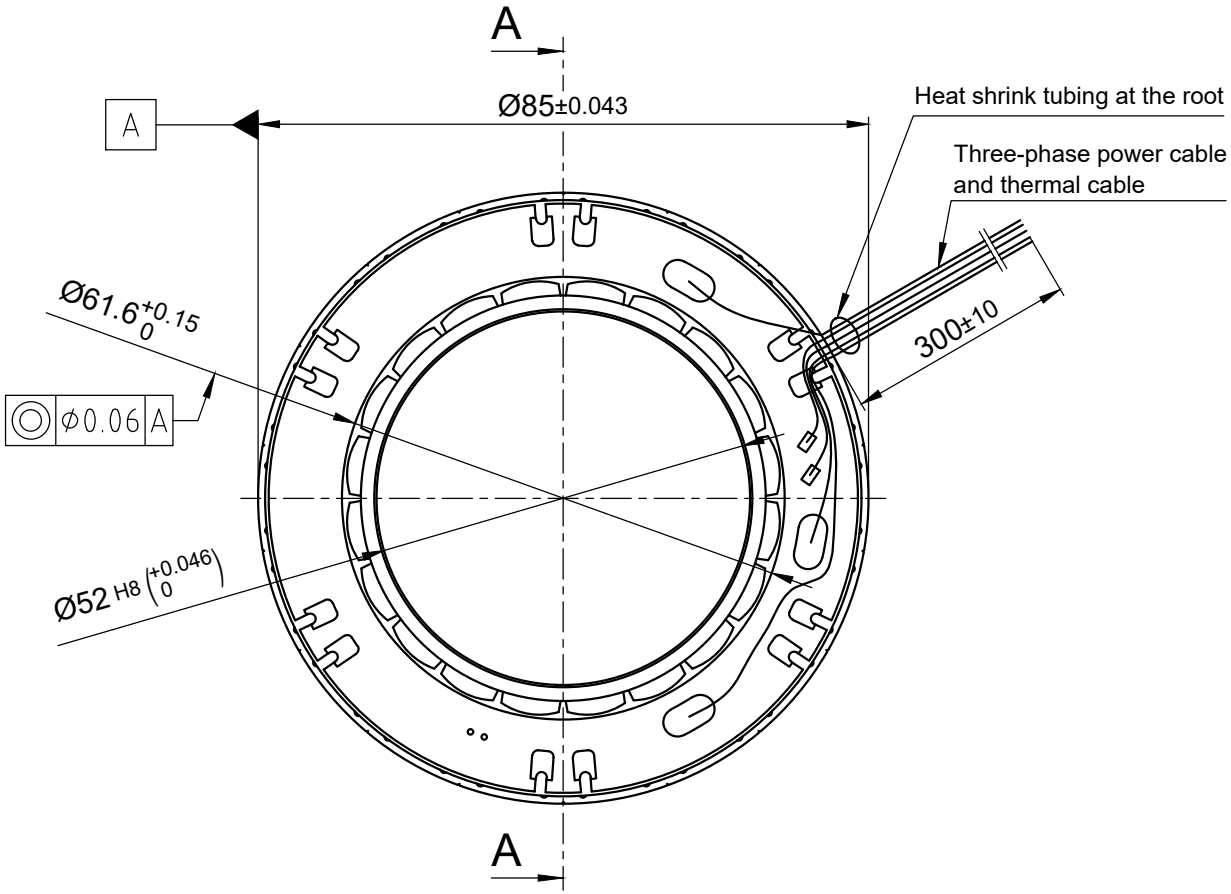

View A-A

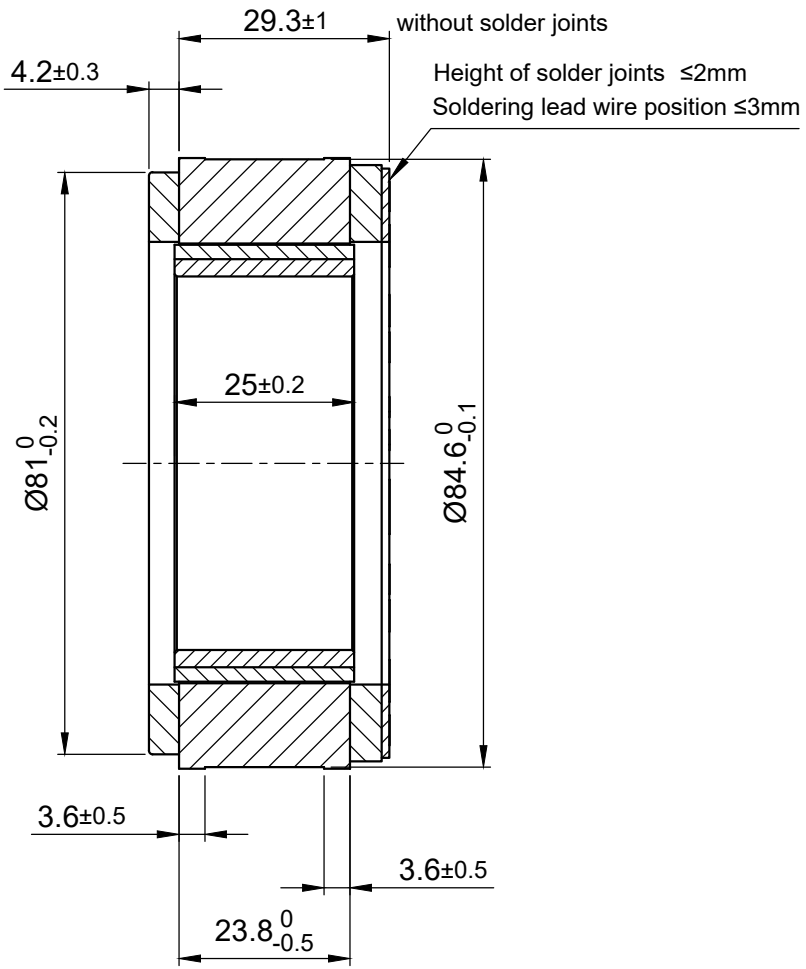

MOTOR SPECIFICATION			
No. of Poles		20	
Rated Voltage	V DC	48	
Current - Rated / Peak	A 1	20.1	/ 49.5
Resistance Line to Line	±10% Ω @20°	0.09	
Inductance Line to Line (1kHz)	±20% mH	0.12	
Torque - Rated / Peak	Nm	2.0	/ 6.0
Torque Constant	Nm/A	0.13	
Rated Power	W	733	
Speed - No Load / Rated	±10% rpm	4000	/ 3500
Rotor Inertia	kg m²	107.9	$x10^{-6}$

GENERAL MOTOR SPECIFICATION		
Ambient Temperature	°C	-20 ... 50
Storage Temperature	°C	-20 ... 85
Max. Temperature Rise (at standstill)	°C	80
Max. Ambient Humidity (non condensing)	%	85
Insulation Class		B
Insulation Resistance	MΩ	100 @500VDC
Dielectric Strength (for 1 sec - coil to case)	V AC	1000

WIRING DIAGRAM			
	Colour	Function	Lead Gauge
Motor	YE	U	UL1332 AWG16
	RD	V	
	BK	W	
Thermistor	WH	NTC1	UL1332 AWG26
	WH	NTC2	

Thermistor (NTC): R25: 100kΩ±5%; B25/50: 3950±1%

ISO 8015	ISO 1302	ISO 2768 cK	ISO 13715

					Date	Name
				Drawn	12.11.2024	Schneid_A
				Reviewed	10.02.2025	Reith_S
				Released	10.02.2025	Reith_S
01	CR_Nr. 2025-0043	Rehse_P	11.09.2025			
REV	Rev. Text	Name	Date			

Nanotec® PLUG & DRIVE

Weight: ±10% 0.56 kg

DKA85L048035

20002696

A4 Page 1

State: Released | Rev: 01 | CONFIDENTIAL