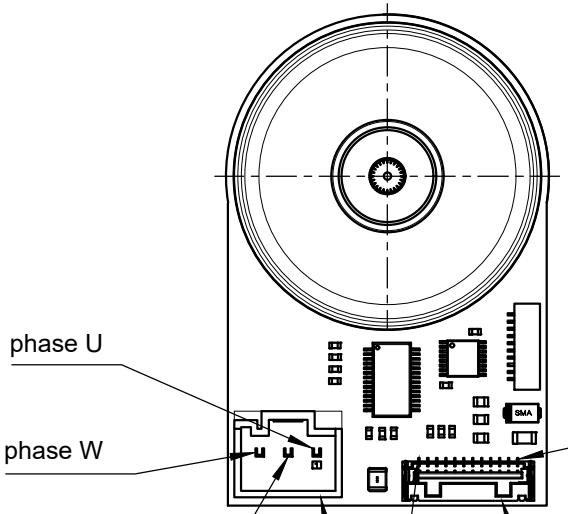

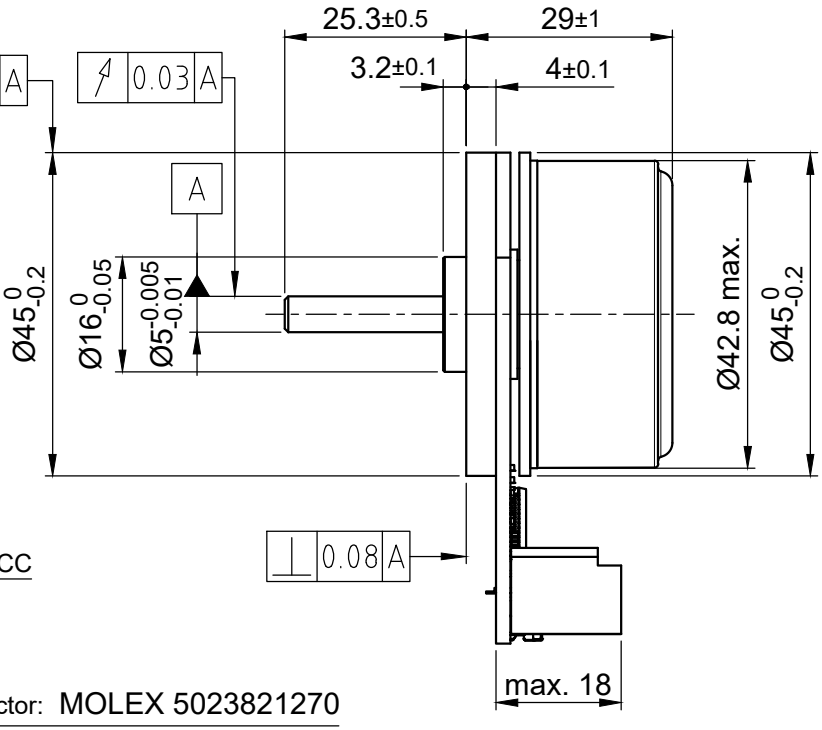

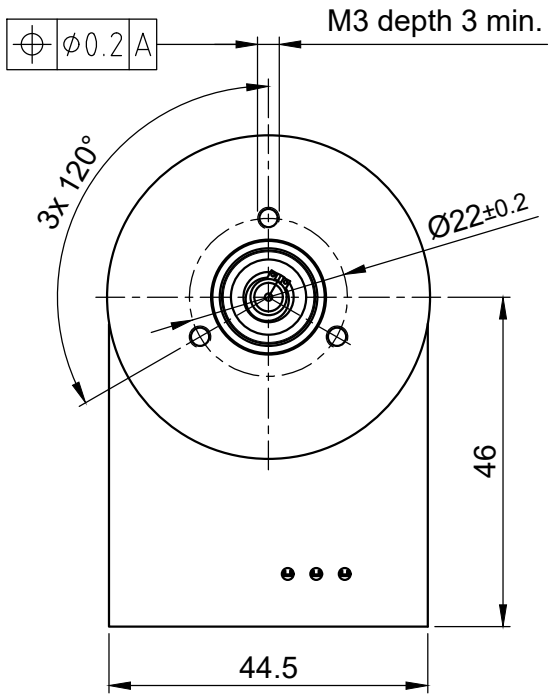

WIRING DIAGRAM			
	PIN	Function	Connector
Motor	1	U	MOLEX 2074790003
	2	V	
	3	W	
Encoder	1	VCC	MOLEX 5023821270
	2	A\	
	3	A	
	4	B\	
	5	B	
	6	n.c.	
	7	n.c.	
	8	H1	
	9	H2	
	10	H3	
	11	Housing	
	12	GND	

ENCODER SPECIFICATION		
Operating Voltage	V DC	5
Resolution	cpr	1024
Resolution (cpr with quadrature)	ppr	4096
No. of Channels		2
Signal Type	incremental	
Index / Line Driver	no / yes	

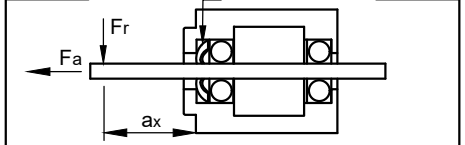

Max. Axial Force	Fa	N	10
Max. Radial Force	Fr (a1 = 10 mm)	N	28
Axial Play	Fa = 4.0 N	mm	0.14
Radial Play	Fr = 4.0 N	mm	0.02

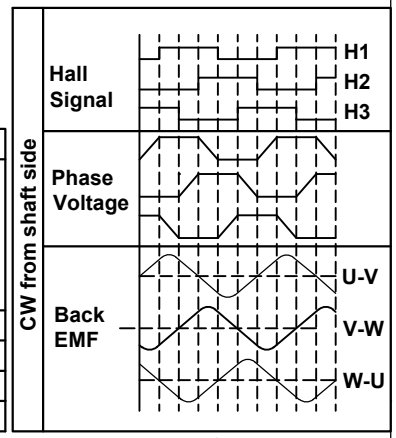

MOTOR SPECIFICATION			
No. of Poles		16	
Rated Voltage	V DC	24	
Current - No Load / Rated / Peak	A	0.5 / 3.5 / 10	
Resistance Line to Line	±10% Ω	0.56	
Inductance Line to Line (1kHz)	±20% mH	0.27	
Torque - Rated / Peak	Nm	0.13 / 0.39	
Torque Constant	Nm/A	0.0369	
Speed - No Load / Rated	±10% rpm	6100 / 4840	
Rotor Inertia	kg m²	18.1	$x10^{-6}$

GENERAL MOTOR SPECIFICATION		
Ambient Temperature	°C	-20 ...55
Max. Temperature Rise (at standstill)	°C	80
Max. Ambient Humidity (non condensing)	%	85
Insulation Class		B
Insulation Resistance	MΩ	100
Dielectric Strength (for 1 min - coil to case)	V AC	600

ISO 8015	ISO 1302	ISO 2768 cK	ISO 13715

REV	Rev. Text	Name	Date

	Date	Name
Drawn	13.09.2022	Schneid_A
Reviewed	13.09.2022	Sejdini._B
Released	13.09.2022	Sejdini._B

Nanotec® PLUG & DRIVE

Weight: ~0.16 kg

DF45L024048-E1

20001701

A4 Page 1

State: Released | Rev: 00 | CONFIDENTIAL