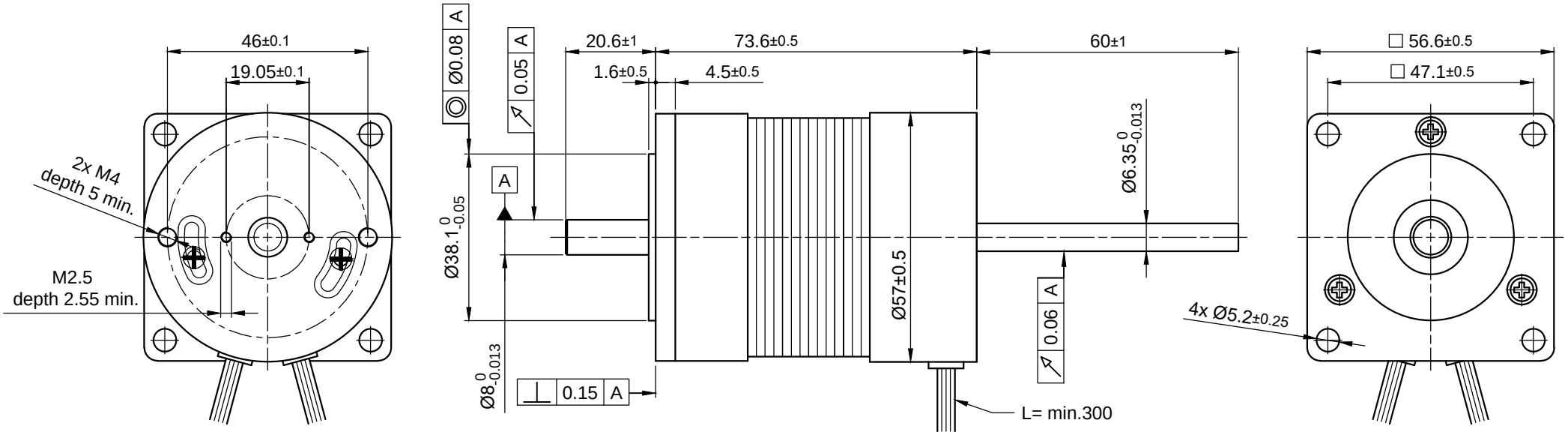

MOTOR SPECIFICATION			
No. of Poles		6	
Rated Voltage	V DC	48	
Current - No Load / Rated / Peak	A	<0.8 / 5.33 / 16	
Resistance Line to Line	±10% Ω	0.8	
Inductance Line to Line (1kHz)	±20% mH	1.2	
Torque - Rated / Peak	Nm	0.47	/ 1.41
Torque Constant	Nm/A	0.1	
Rated Power	W	172	
Speed - No Load / Rated	±10% rpm	4500	/ 3500
Rotor Inertia	kg m²	11.9	$x10^{-6}$

WIRING DIAGRAM			
	Colour	Function	Lead Gauge
Motor	Ye	U	UL1332 AWG18
	Rd	V	
	Bk	W	
Hall 18 Impl. per Rev.	Rd	+5V	UL1430 AWG26
	Bu	H1	
	Gn	H2	
	Wh	H3	
	Bk	GND	

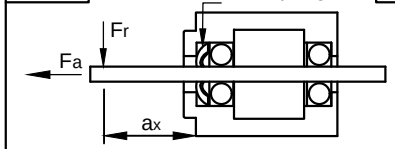

Max. Axial Force	Fa	N	15
Max. Radial Force	Fr (a2 = 20 mm)	N	75
Axial Play	Fa = 40 N	mm	0.025
Radial Play	Fr = 4.6 N	mm	0.025

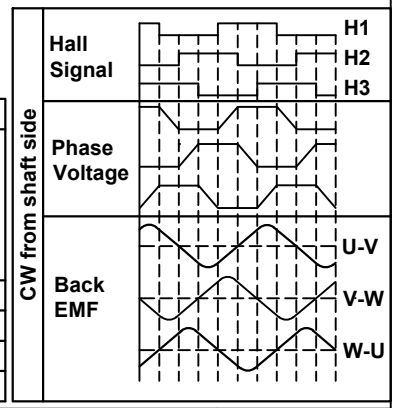

GENERAL MOTOR SPECIFICATION		
Ambient Temperature	°C	-10 ... 50
Max. Temperature Rise (at standstill)	°C	80
Max. Ambient Humidity (non condensing)	%	85
Insulation Class		B
Insulation Resistance	MΩ	100
Dielectric Strength (for 1 min - coil to case)	V AC	500

ISO 8015	ISO 1302	ISO 2768 cK	ISO 13715

	Date	Name
Drawn	09.04.2019	Schneid_A
Checked	10.04.2019	Reith_S
Approved	----	----

REV	Rev. Text	Name	Rel. Date

Nanotec® PLUG & DRIVE

Weight: 0.72 kg

DB59L048035-B3

03200076

-

A4-Q

State: Sample | Rev: - | P